REVISION HISTORY			
DATE	REV.	DESCRIPTION	BY
2026/2/25	A	INITIAL RELEASE	PXiong

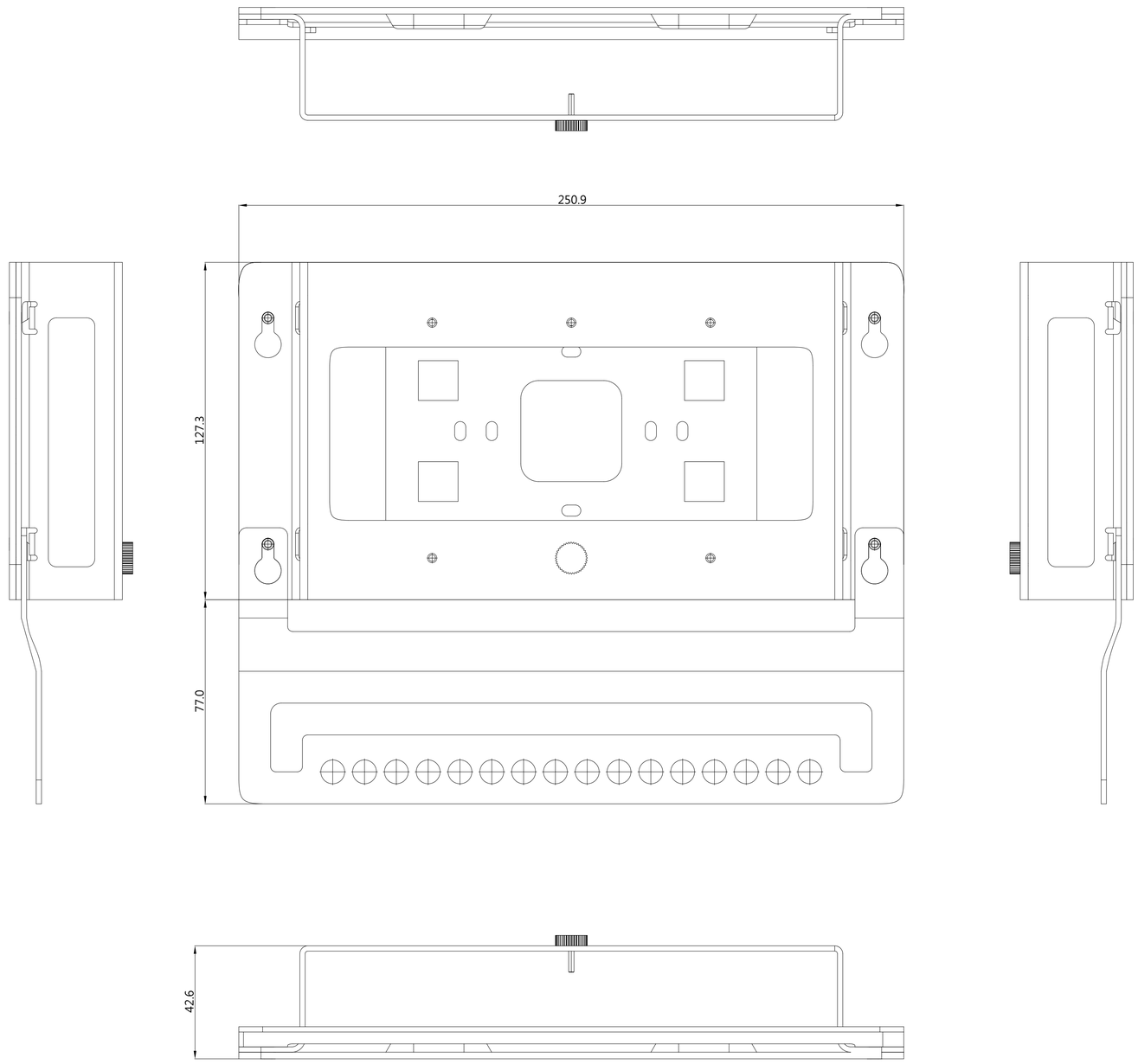

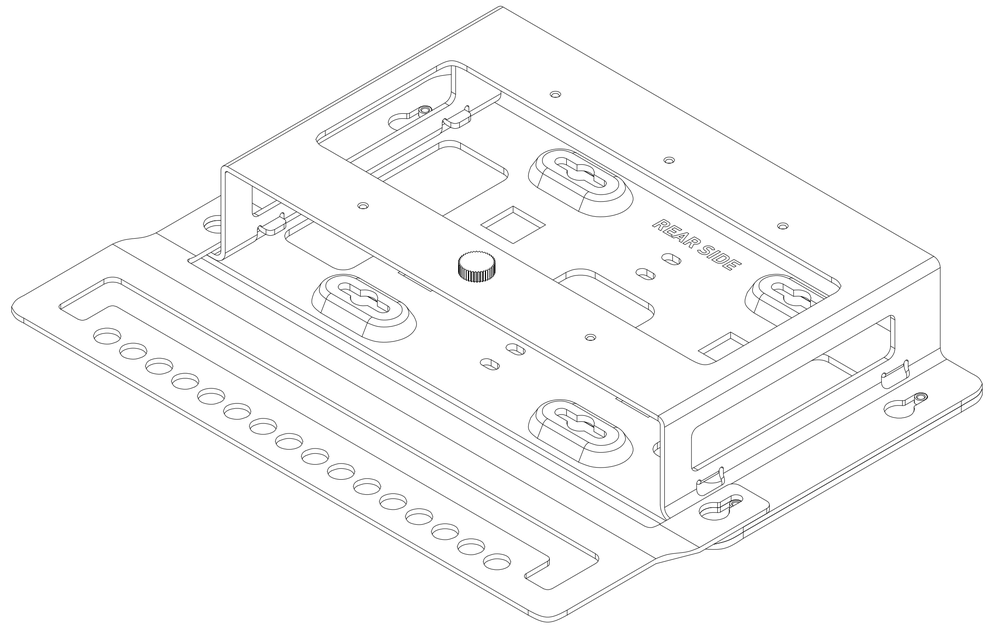

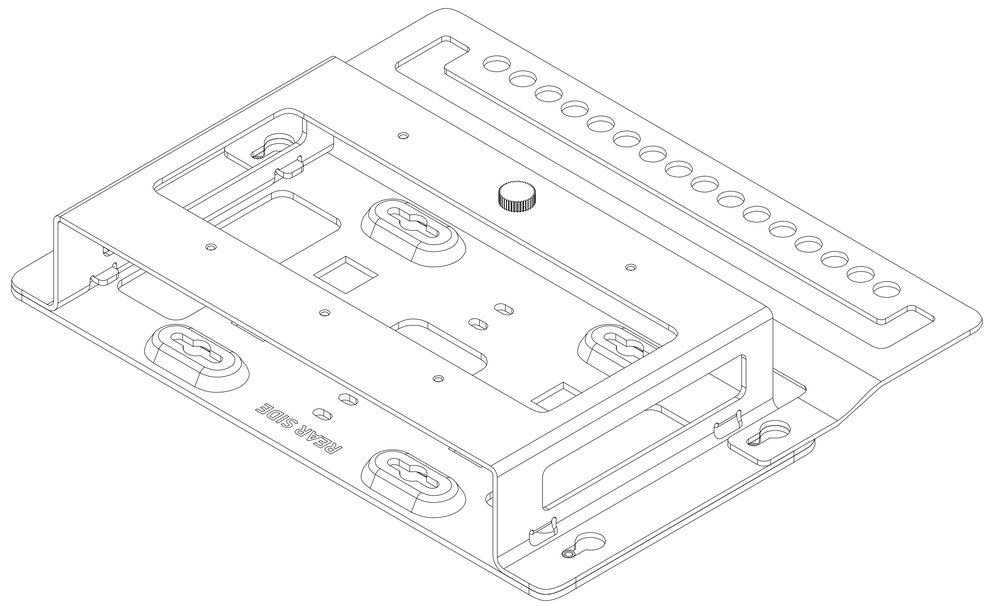

NOTES:

1. Unit: mm
2. Detailed dimension refer to DXF/DWG files

2025 © HARMAN INTERNATIONAL INDUSTRIES, INCORPORATED. ALL RIGHTS RESERVED. DO NOT USE, DISCLOSE, SELL, REPRODUCE, PUBLISH OR MODIFY WITHOUT AUTHORIZED WRITTEN HARMAN PERMISSION.

ROHS
RESTRICTION OF HAZARDOUS SUBSTANCES ALL MATERIAL USED IN THIS ASSEMBLY ARE RoHS COMPLIANT
SUPPLIER SHALL PROVIDE A CERTIFICATE OF ROHS COMPLIANCE WITH THE FIRST ARTICLE

DIMENSIONS SHOWN ARE FOR REFERENCE AND INSPECTION ONLY. REFER TO CAD MODEL PROVIDED WITH THIS DRAWING FOR OVERALL DEFINITION OF PART GEOMETRY.

THIRD ANGLE PROJECTION

DRAWN BY PXiong	DATE 2026/2/25
DESIGNED BY	DATE
PROJECT MANAGER/ENGINEER	

HARMAN

TITLE DWG,PICTORIAL,BSS-MT-NAV1

NO. BSS-MT-NAV1_PICTORIAL REV A

SIZE	SCALE		SHEET	OF
A1	1:1	DO NOT SCALE DRAWING	1	1